Internship Report on

Static Test Pad for Rocket Motor

At STAR – Space Technology and Aeronautical Rocketry

Darsh Yogesh Butala

Enrollment Number- A70405520001

Department of Aerospace Engineering (AE)

Amity School of Engineering and Technology (ASET)

Amity University Maharashtra

Date – 28th June 2022 to 28th July 2022

Period of Internship – 1 Month

Approval Sheet

This Summer Internship Report entitled "**Static Test Pad for Rocket Motor**" by **Mr. Darsh Butala** from Department of **Aerospace Engineering (AE), Amity School of Engineering and Technology (ASET), Amity University Maharashtra (AUM),** has been approved.

Examiner
Dr. Amol G. Kamble

Date: 20/10/2022

Declaration

I declare that this written submission represents my ideas in my own words. I also declare that I have adhered to all principles of academic honesty and integrity and have not misrepresented or fabricated or falsified any idea/data/fact/source in my submission. I understand that any violation of the above will be cause for disciplinary action by the Institute and can also evoke penal action from the sources which have thus not been properly cited or from whom proper permission has not been taken when needed.

Darsh Butala
Name of Student

Date: 20/10/2022

Acknowledgement

Firstly, I thank my coordinators and other faculty in Amity University, Mumbai who gave me such a wonderful chance to work in a well-known research lab. The internship opportunity I had in STAR Lab Surat was a great chance for learning and professional development. Therefore, I consider myself as a very lucky individual as I was provided with an opportunity to work on Avionics and Designing of Static Test Pad for Rocket Motors. I am also grateful for having a chance to meet so many wonderful people and professionals who led me through this internship period. I am using this opportunity to express my deepest gratitude and special thanks to the founder of the lab who despite being extraordinarily busy with his duties, took time out to hear, guide and keep me on the correct path and allow me to carry out my internship at their esteemed lab. I express my deepest thanks to my supervisor for taking part in useful decisions & giving necessary advice and guidance and arranged all facilities to make life easier. I choose this moment to acknowledge his contribution gratefully. It is my radiant sentiment to place on record my best regards, deepest sense of gratitude to my internship coordinator from university.

SPACE TECHNOLOGY AND AERONAUTICAL ROCKETRY

CERTIFICATE OF COMPLETION

This certificate is presented to

Mr. Darsh Butala

in recognition for the completion of

Virtual Training & Internship Program on

Design & Simulation of Static Test Pad for Solid Rocket Motor

as an Avionics Intern

conducted from 28 June 2022 to 28 July 2022 at

SPACE TECHNOLOGY AND AERONAUTICAL ROCKETRY

Harsh Patel
Head of Shapers
Department, STAR

Sunny Kabrawala
Director, STAR

Static Test Pad for Rocket Motor

What is a Static Test Pad?

A Static Test Pad is a structure that is used to measure thrust and temperature of a solid rocket motor. And using these data the user is able to calculate maximum thrust, maximum temperature, specific impulse and other performance characteristics. It is a standard process in the propulsion testing of a rocket motor.

Basic working principle of Static Test Pad:

The basic working principle behind Static Test Pad is –

Whenever a rocket motor is ignited it generates Thrust.

If this Thrust is applied on a load cell, the load cell converts the thrust into electrical signal and sends that data to the Arduino Board. The Arduino Board then interprets the electrical signal and displays the result or the output to the user in appropriate units.

Also a thermocouple can also be used to measure the temperature.

Using these data maximum thrust, maximum temperature, specific impulse and other performance characteristics of Rocket Motor can be calculated.

These data can be then stored into the SD Card or can be transmitted wirelessly through Bluetooth or RF modules.

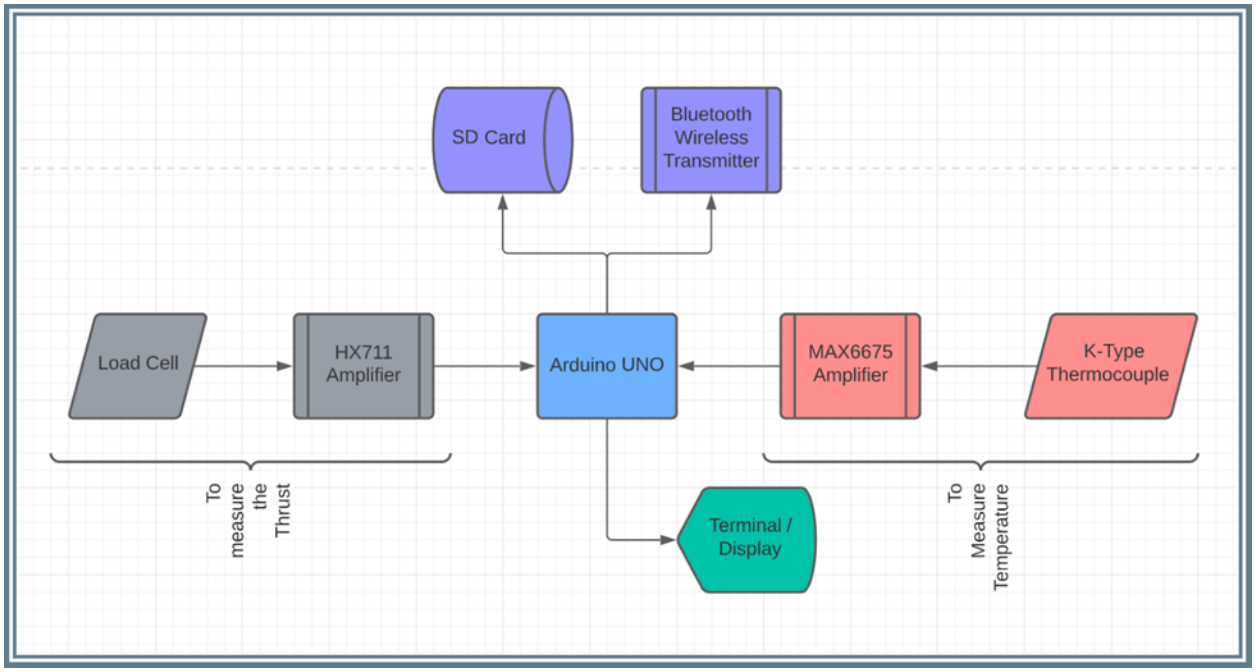

Why to make a Static Test Pad?

Whenever designing any rocket's propulsion system, we have to check that the propulsion system which we are using is according to the design specification or not.

That is whether the thrust is as expected or not?

The maximum temperature should be less than the maximum temperature the motor mount can withstand.

The performance of the rocket motor should be close to the design specification.

And all these specification should be checked and verified in a safe environment and as economically as possible

For these needs we required a Static Test Pad so that we can check all these things before inserting the rocket motor into the actual Rocket.

Architecture:

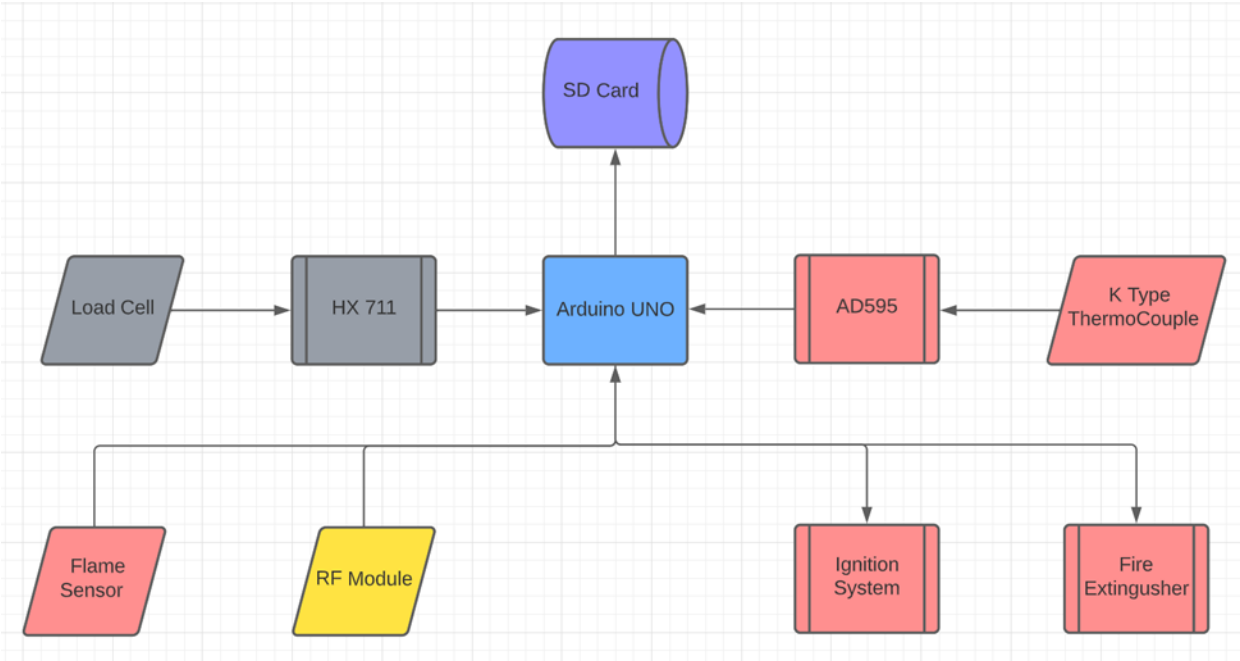

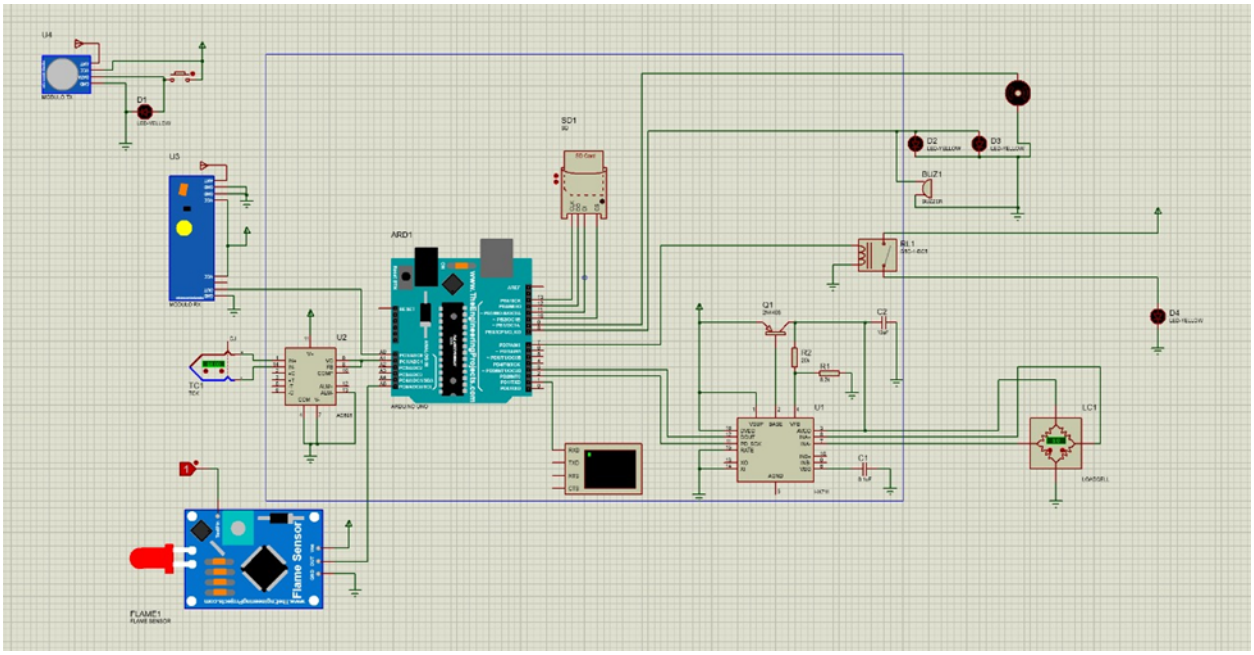

Data coming from Load cell and Thermocouple are sent into the Arduino Board which stores the data into SD Card.

RF Module is used to control the ignition system. RF Module sends signal to Arduino Board which in turn activates the ignition system.

In case of any explosion the flame sensor will detect the flames and will send a signal to the Arduino Board. The Arduino Board will then activate the fire extinguisher system.

Basic components, software required to build the Avionics of Static Test Pad:

Components

Arduino Uno

Load Cell

HX 711

K-Type Thermocouple

AD595

Flame Sensor

SD Card Module

RF Module – Receiver and Transmitter

Ignition System

Relay Switch

LEDs

Buzzer

Electric Motor

Batteries

Software Used

Proteus for Simulation of all electronic components

Arduino IDE for programming

Eagle for PCB designing

Price List for Avionics System

Name	Price
Arduino Uno	₹2,500
ADA 595	₹900
HX711	₹400
K type Thermocouple	₹200
Load Cell	₹3,000
SD card module	₹100
Relay switch	₹50
Flame Sensor	₹50
Rf Module	₹120
Electric Motor	₹600
Led Lights	₹400
Buzzer	₹100
Battery 5V	₹2,000
Total	**₹10,420**
Approx.	**₹11,000**

Note:

For Batteries use a 5V battery for Arduino and for ignition systems use an appropriate battery depending on your ignition wires but generally a high output current batteries are used.

Procedure to build the Avionics of Static Test Pad:

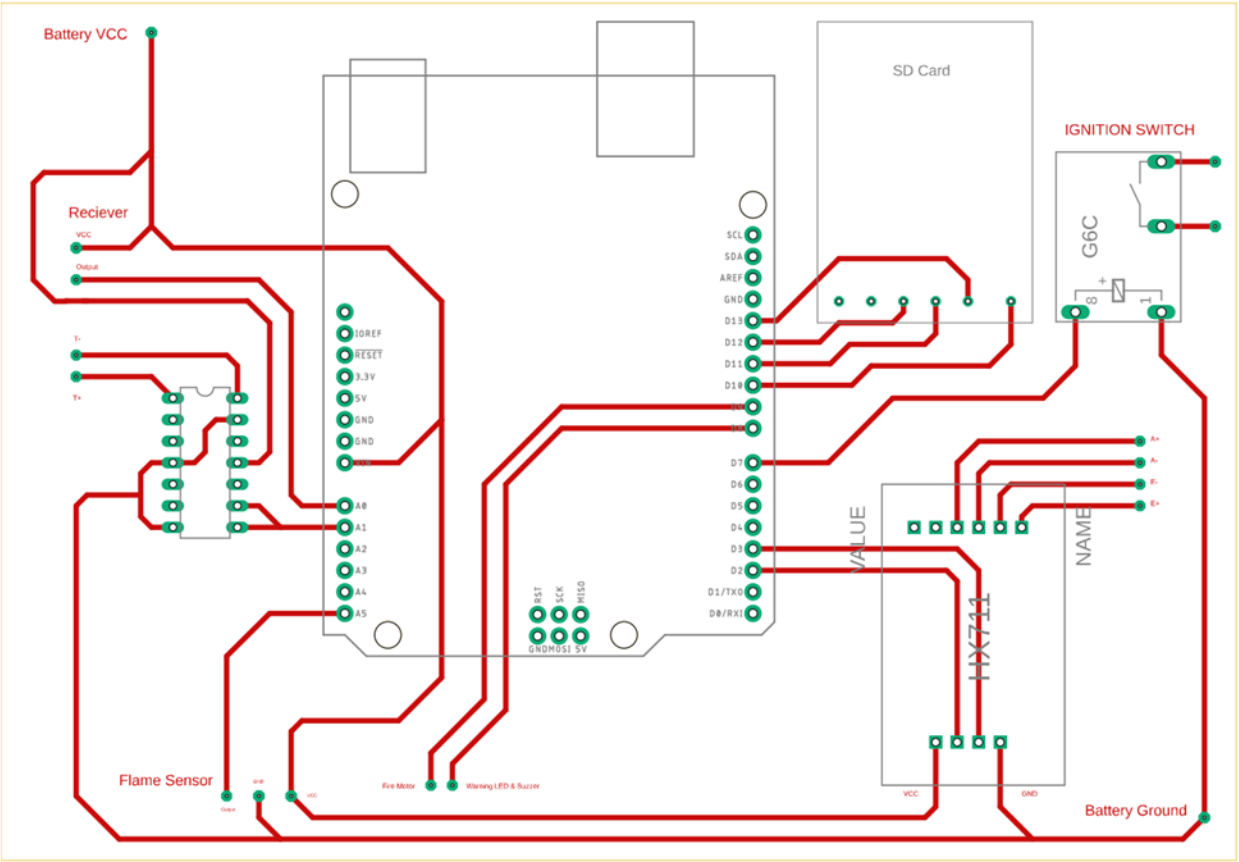

Assemble all the electronic components on the PCB as shown in the above figure. (Use this figure as a reference)

While Flame Sensor, RF Receiver, Load Cell and Thermocouple are not present on the PCB instead these components should be placed at appropriate locations.

Here the focus is mainly on how to build the Avionics for Static Test Pad.

But for structure here are a few images on how to assemble the structure for Test Pad.

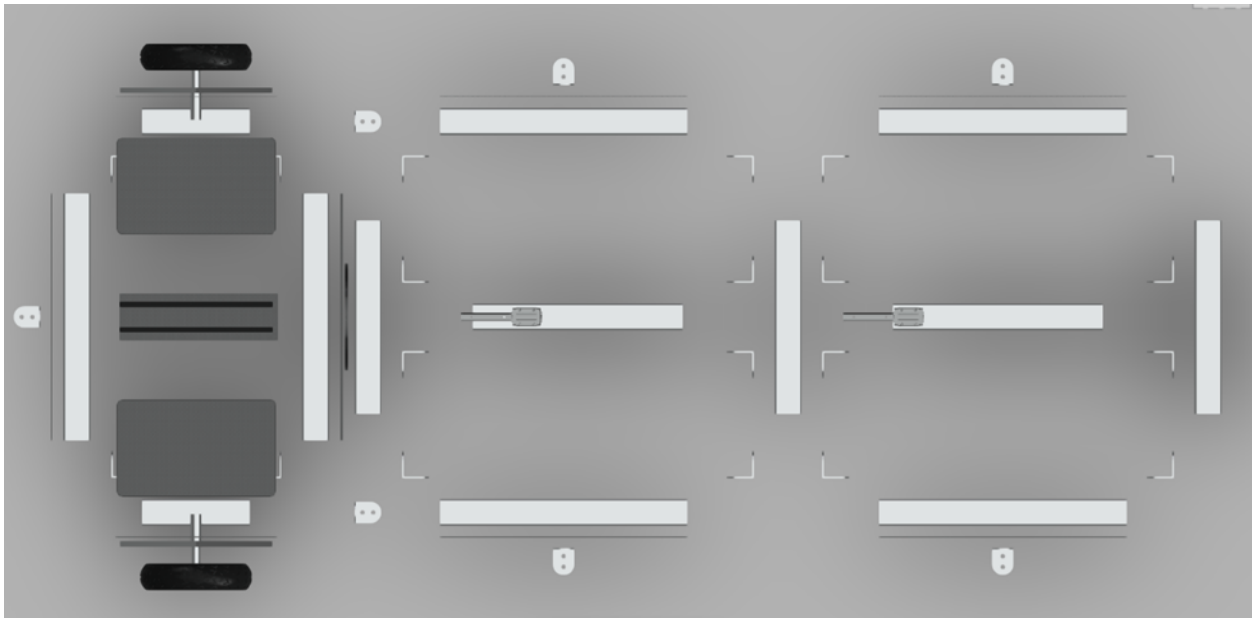

The Final Model After all the things are assemble will look like this.

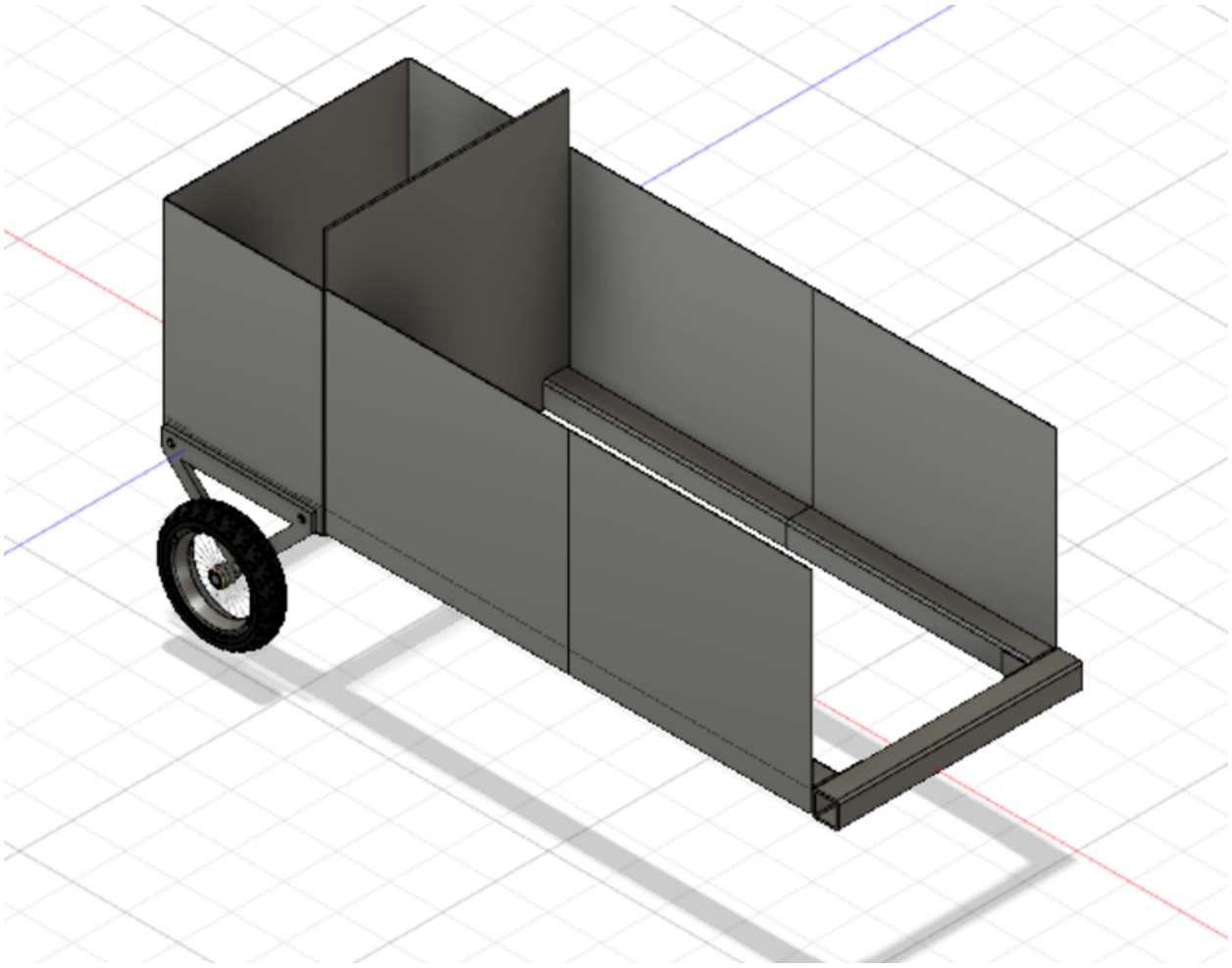

The wheels are retractable and when retracted it will look like this.

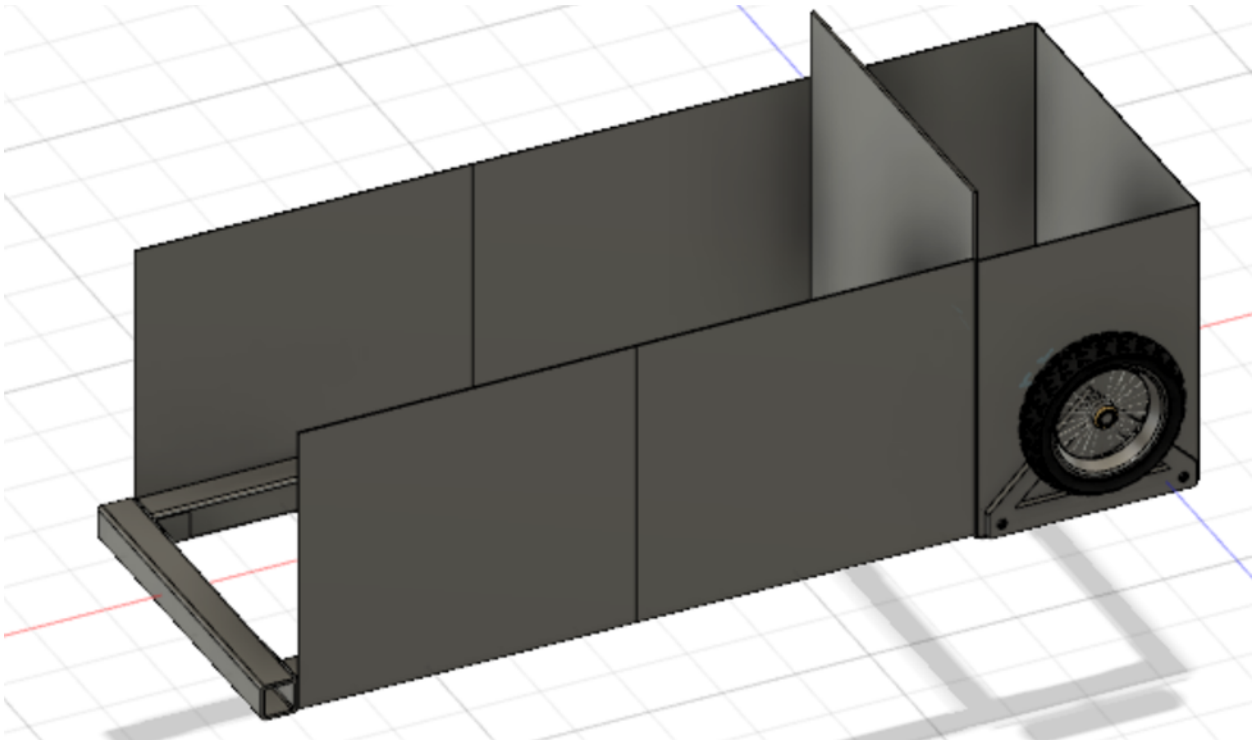

Observation:

The Test Pad was able to handle around 25kN of Force which is sufficient for most of the Rocket Motor.

For Avionics Part

The load cell and temperature sensor are able to give accurate readings with negligible error.

The Ignition system can be successfully controlled wirelessly using an RF module from a distance of 20-50 meters.

Also, the Flame sensor is able to detect the flames and can activate the Fire Extinguisher system successfully

Results:

The data obtained from the avionics system is uploaded into excel sheets for further data analysis.

Time (seconds)	Thurst (N)	Temperature (C)
0	0	32
1	0	33
2	0	33
3	0	32
4	750	91
5	1294	173
6	1590	280
7	1440	351
8	1310	457
9	1190	632
10	1021	757
11	927	870
12	712	926
13	558	976
14	286	1029
15	163	1103
16	79	1068
17	0	1019
18	0	983
19	0	871
20	0	790
21	0	499

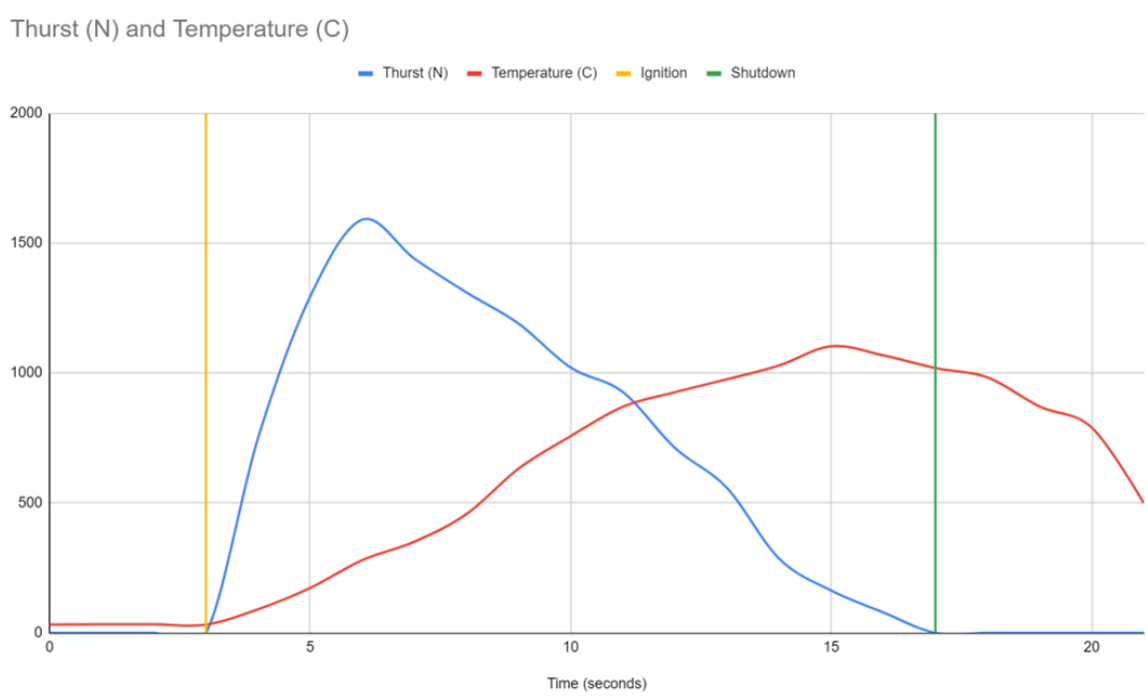

Conclusion:

From the above Observations we can conclude a simple Static Test Pad along with its Avionics system has been successfully designed and simulated.

Precautions:

While performing Testing make sure no one is near the Test Pad and everyone is maintaining a safe distance.

Before igniting the rocket motor make sure all the connections are secured and all the sensors are working correctly.

The ignition wires should be attached in the very end when all the security and safety checks are completed.

When the ignition system will start a 3 sec delay will start and all the warning lights and buzzer will keep beeping. This is to inform the user that the ignition is about to start in a few seconds and also to prevent any accidents.